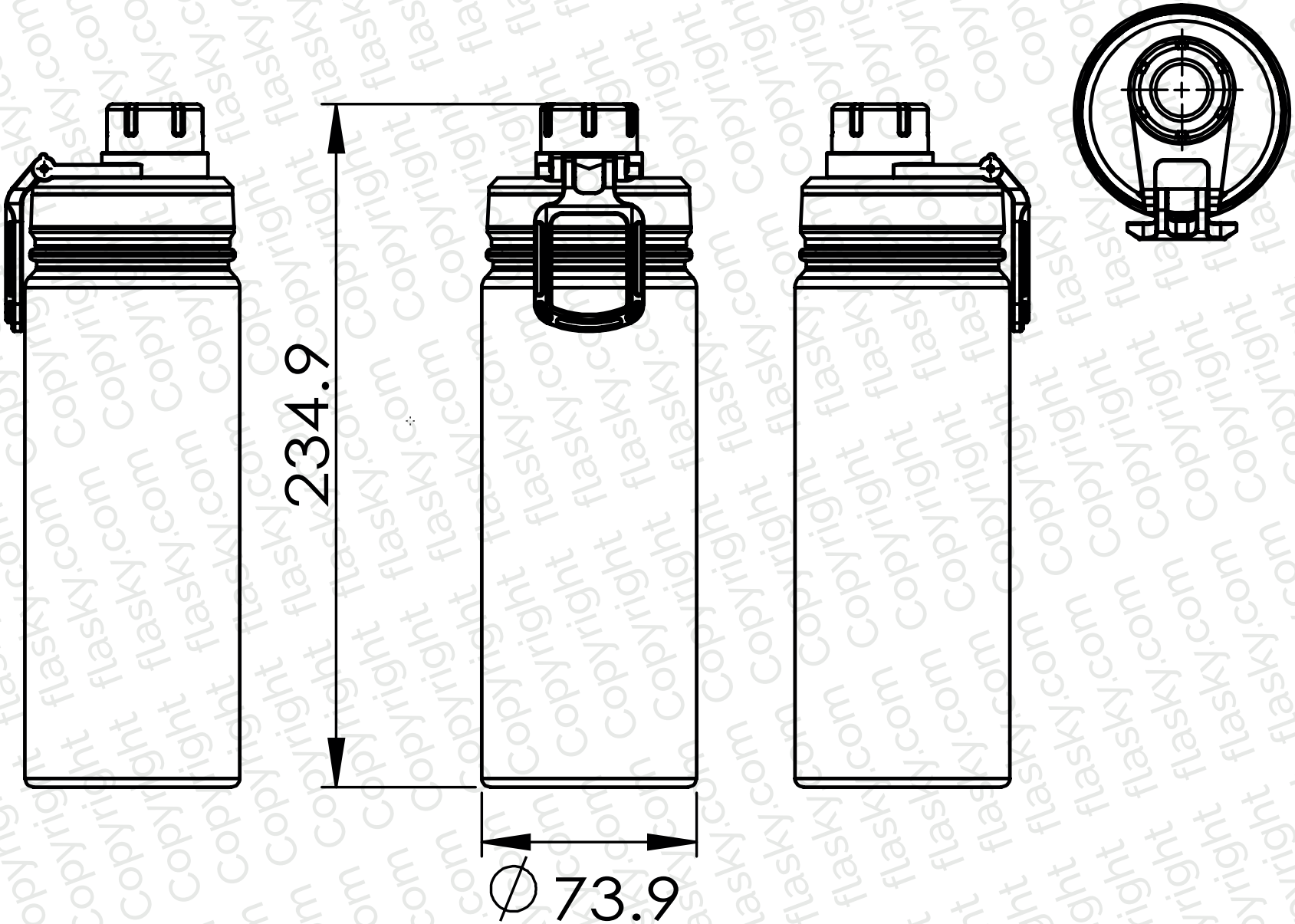

PRODUCT	CODE	DIMENSIONS	SCALE
Traveler	AD550	mm	1:2

flasky

flasky.com Copyright