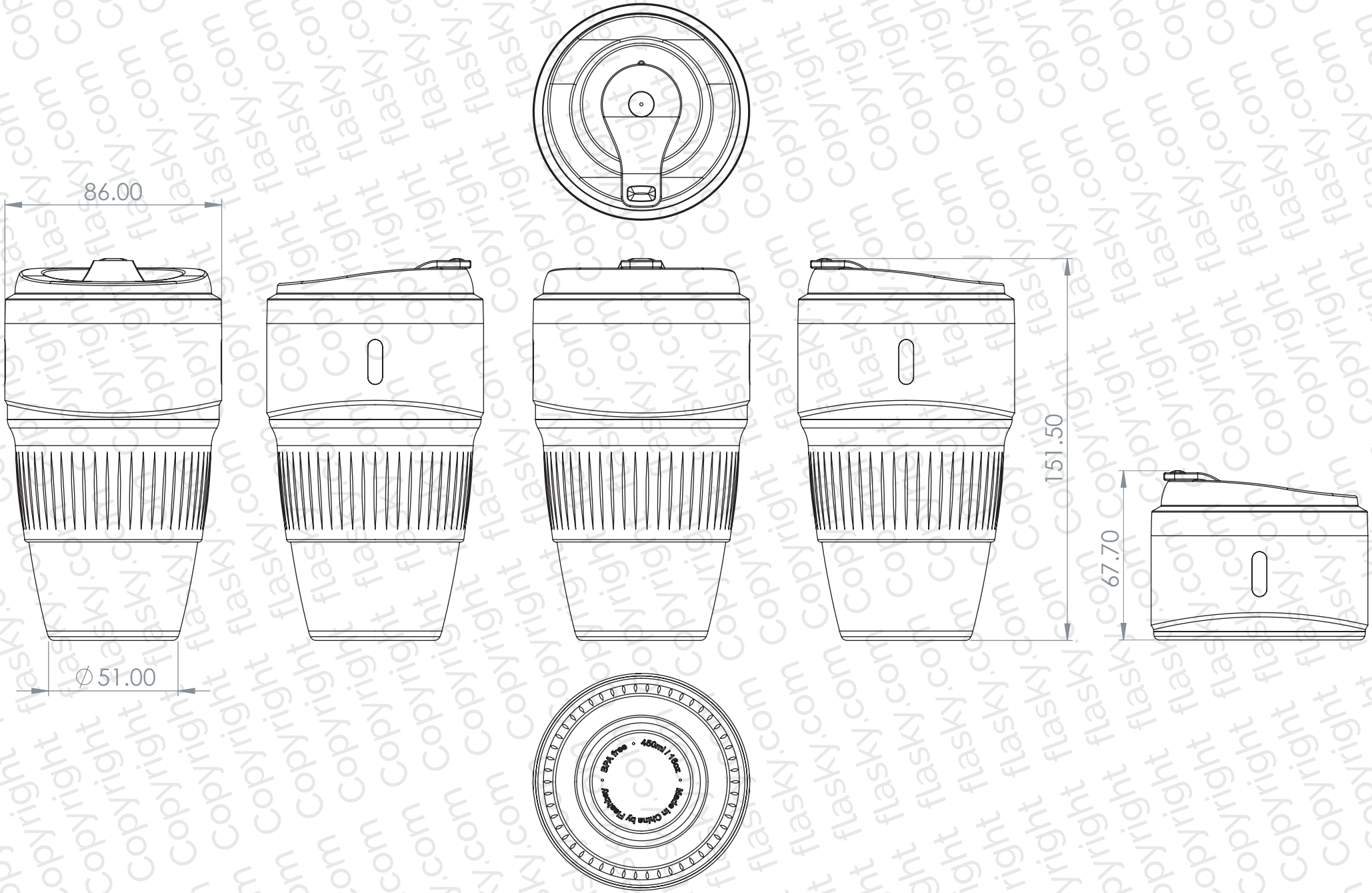

PRODUCT	CODE	DIMENSIONS	SCALE
Barista	BA	mm	1:2

flasky